Казимиров Вячеслав
10.05.1970 – 03.09.2015

Monte Carlo simulations of SESANS experiments with use of time-gradient magnetic fields

V. Bodnarchuk, A. Ioffe, V. Sadilov
S. Manoshine, R.V. Erhan

Basic principle

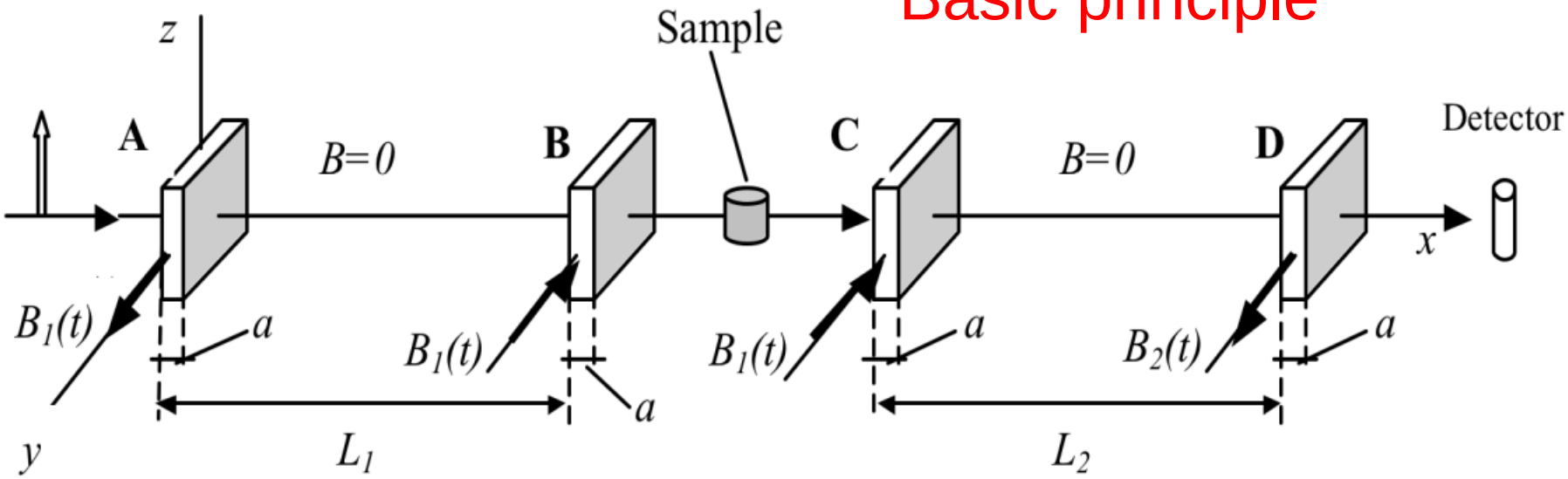

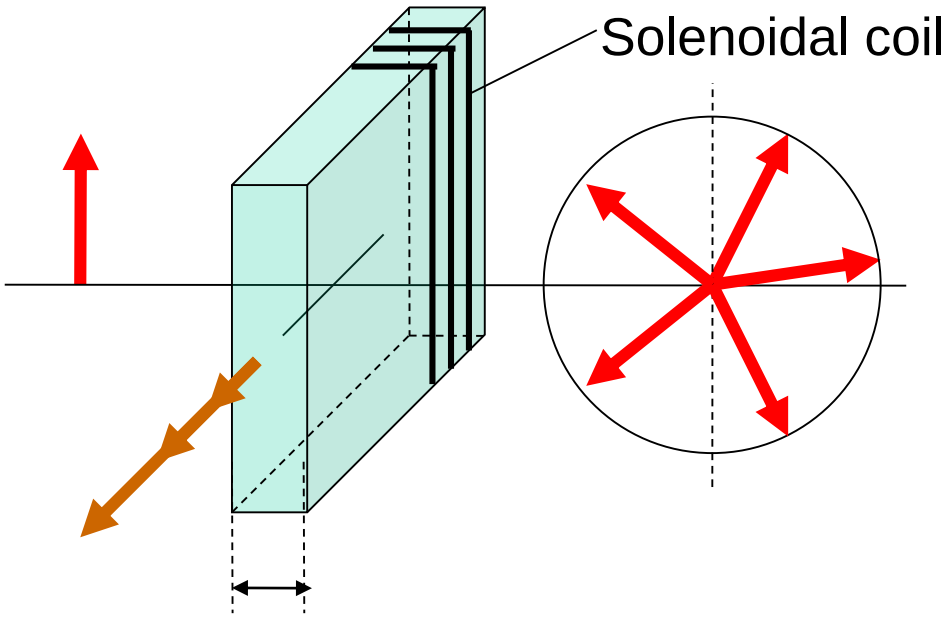

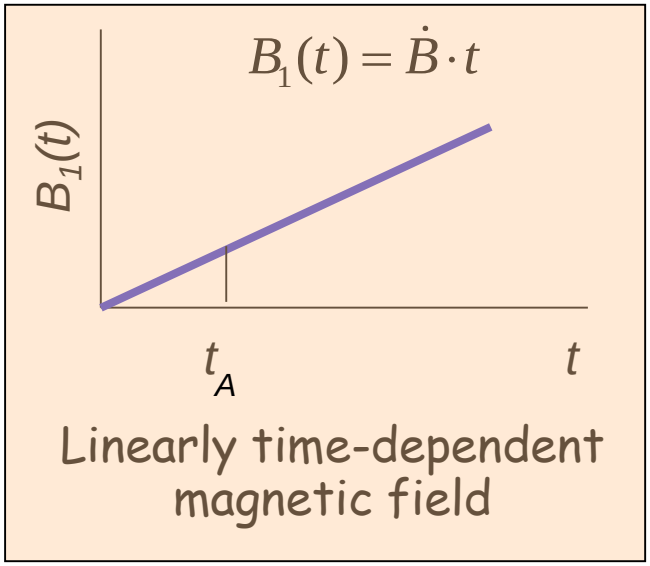

$$\varphi_A(t_A,\tau) = \gamma \int_{t_A}^{t_A+\tau_1} \dot{B} \cdot t dt = \gamma \cdot \dot{B} \cdot t_A \cdot \tau_1 + \gamma \cdot \dot{B} \cdot \frac{\tau_1^2}{2}$$

Larmor phase in one arm of spin-echo

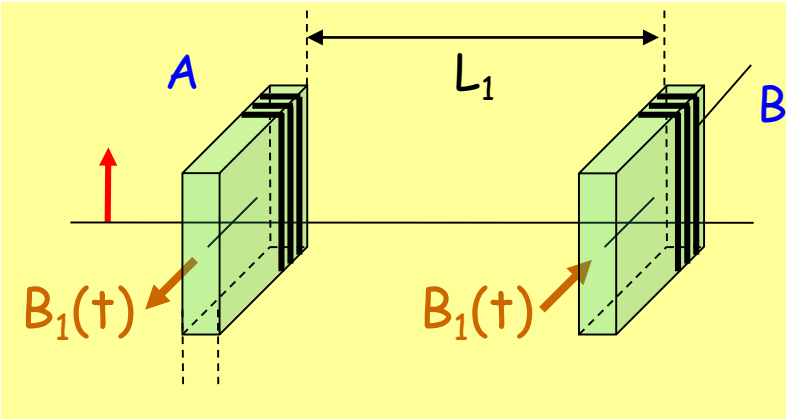

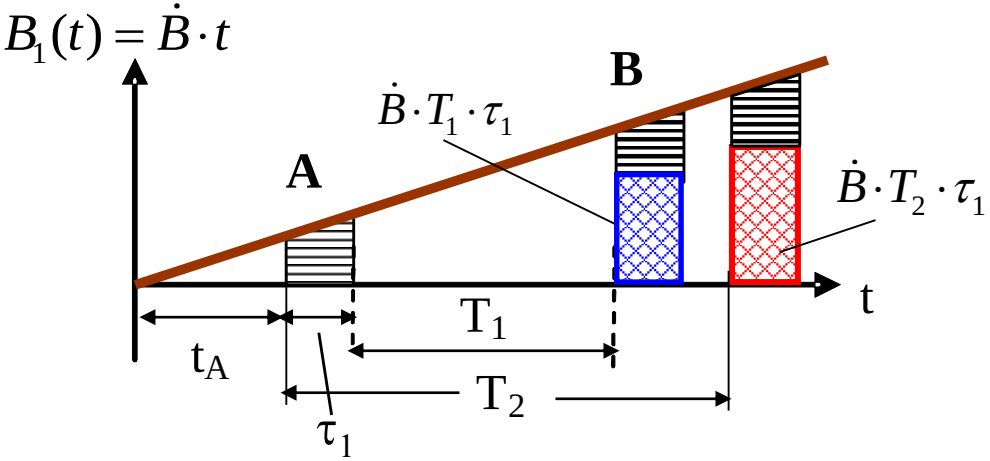

$$\Phi_I = \varphi_A(t_A, \tau) + \varphi_B(t_A, \tau) = -\gamma \cdot \dot{B}_1 \cdot T_1 \cdot \tau_1 = -\gamma \cdot \dot{B}_1 \cdot \frac{L_1}{V_1} \cdot \frac{a}{V_1} \sim \lambda^2$$

- is independent from the neutron arrival time time t_A at the 1st spin turner, but only depends on the neutron velocity $\Rightarrow$ <u>a speed encoder</u>.

Experimental proof

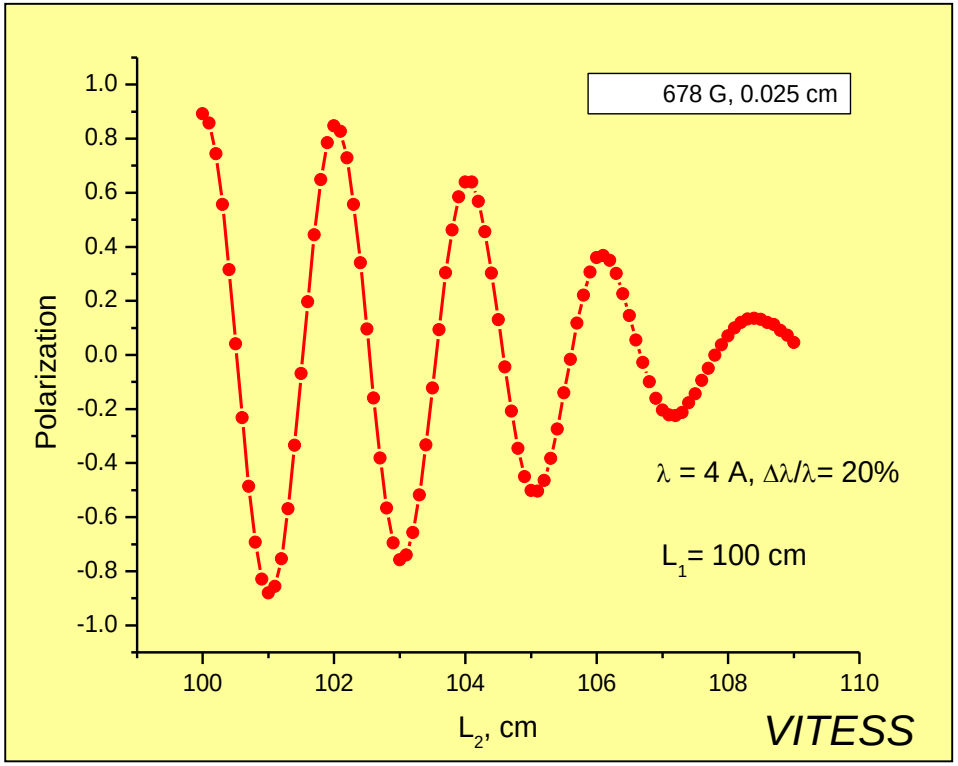

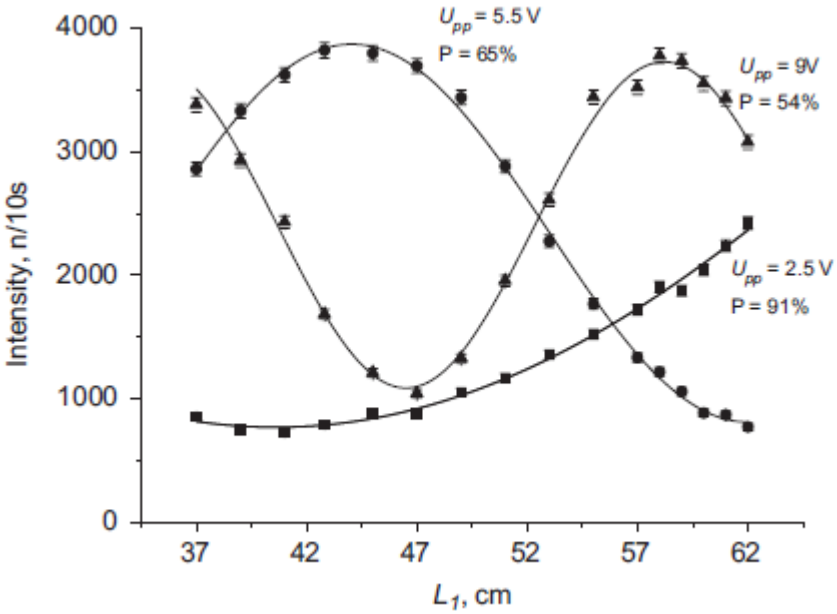

Intensity dependence on the distance between two spin turners.

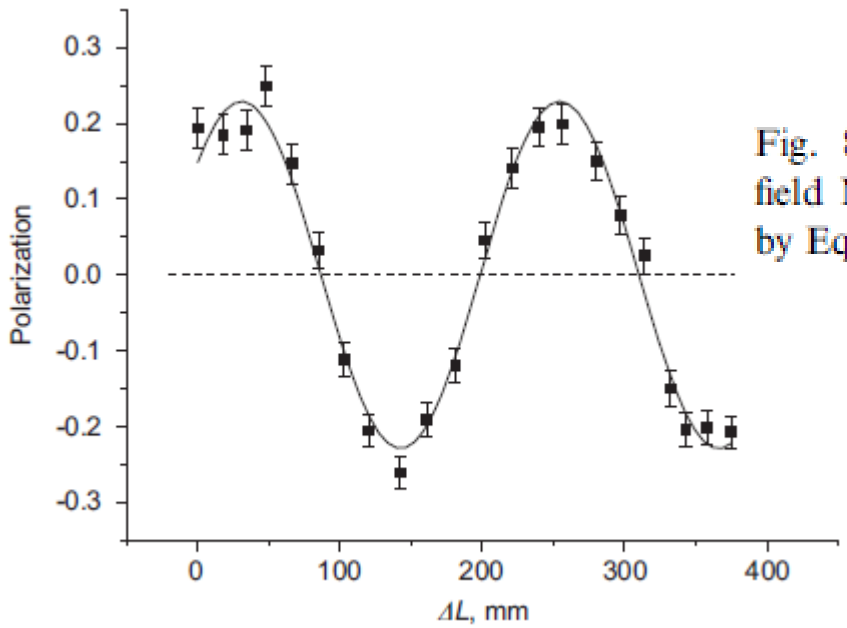

Fig. 8. The neutron spin–echo signal for the time-gradient magnetic field NSE spectrometer. The solid line is the fit to the expression given by Eq. (12).

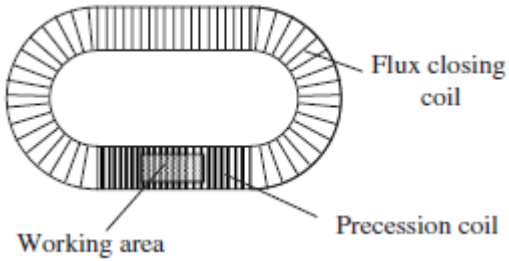

A. Ioffe et al. / Nuclear Instruments and Methods in Physics Research A 586 (2008) 36–40

SESANS with time gradient magnetic field

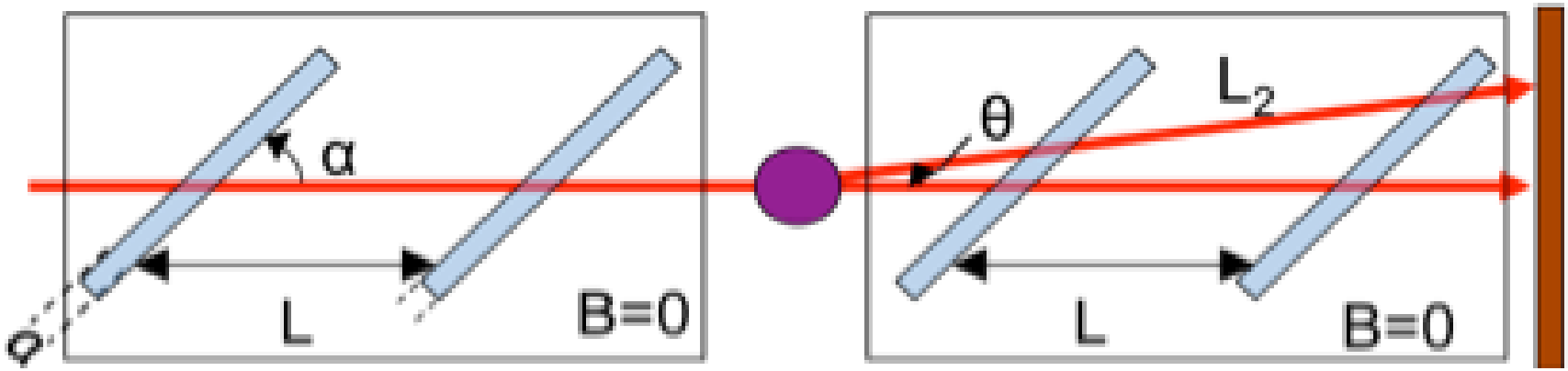

$$\Delta\Phi_{TGF} = \gamma B_{max} f \frac{2aL_1 ctg(\alpha)}{v_n^2 \sin(\alpha)} \theta$$

$$\Delta\Phi = Q \cdot Z_{TGF}$$

$$Z_{TGF} = \gamma B_{max} f \frac{2\hbar\, a\, L\, ctg(\alpha)}{m_n\, v_n^3 \sin(\alpha)}$$

Expected parameters

Hardware parameters:

Coils will operate at:

$I = 130$ A
$\alpha = 30$ deg

Coils width:

$a = 0.02$ m

Arm length:

$L = 0.6$ m

Field amplitude:

$H = 300$ Oe

Maximum field frequency:

$F = 2000$ Hz

At maximum frequency:

$Z_{TGF} \sim 10$ Å (λ=1 Å) ~1000Å (λ=5 Å)

Analytical expression

$$G(Z_{TGF}) = \frac{1}{k^2}\int_{-\infty}^{+\infty} dQ_y \int_{-\infty}^{+\infty} dQ_z S(\boldsymbol{Q}) cos(Q_z Z_{TGF})$$

$$\frac{P(Z_{TGF})}{P_0} = exp\left[G(Z_{TGF} - G(0)\right]$$

$$P(\lambda, R) = \int_{\Omega} I(\theta, R, \lambda) cos(\Delta\Phi(\theta, \phi, \lambda)) d\Omega$$

Ω-Detector aperture

$$I(\theta, R, \lambda) := \left[\frac{\sin\left(\frac{4\pi}{\lambda}\cdot\sin\left(\frac{\theta}{2}\right)\cdot R\right) - \frac{4\pi}{\lambda}\cdot\sin\left(\frac{\theta}{2}\right)\cdot R\cdot\cos\left(\frac{4\pi}{\lambda}\cdot\sin\left(\frac{\theta}{2}\right)\cdot R\right)}{\left(\frac{R}{\lambda}\cdot\sin\left(\frac{\theta}{2}\right)\right)^3}\right]^2$$

Time-gradient spin-echo: pulsed source

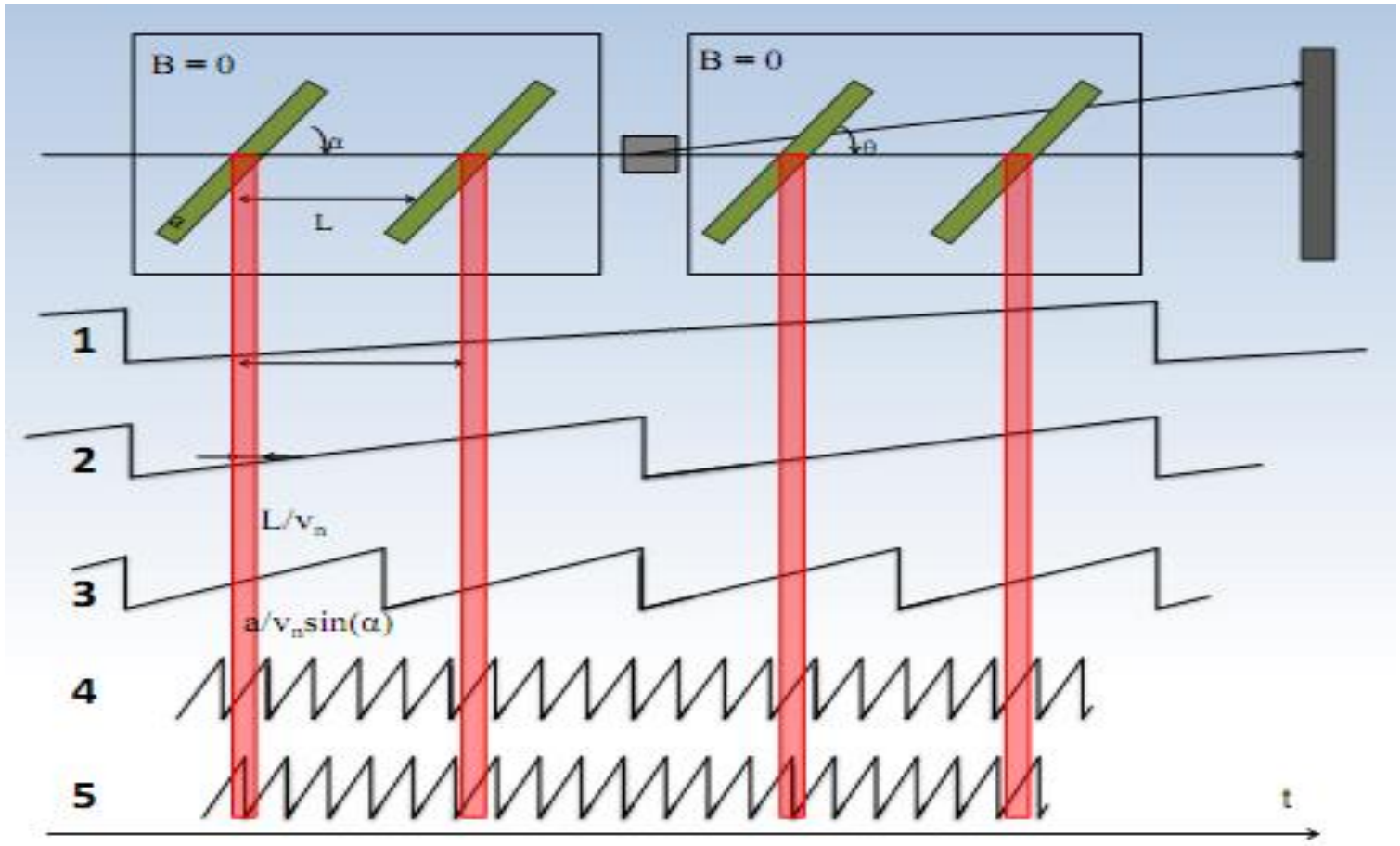

Different operation modes:
(1): one saw-teeth covers the neutron propagation time over all four spin turners;
(2): over two spin turners;
(3): over one spin turner;
(4): over one spin turner, but with multiple oscillations between spin turners.

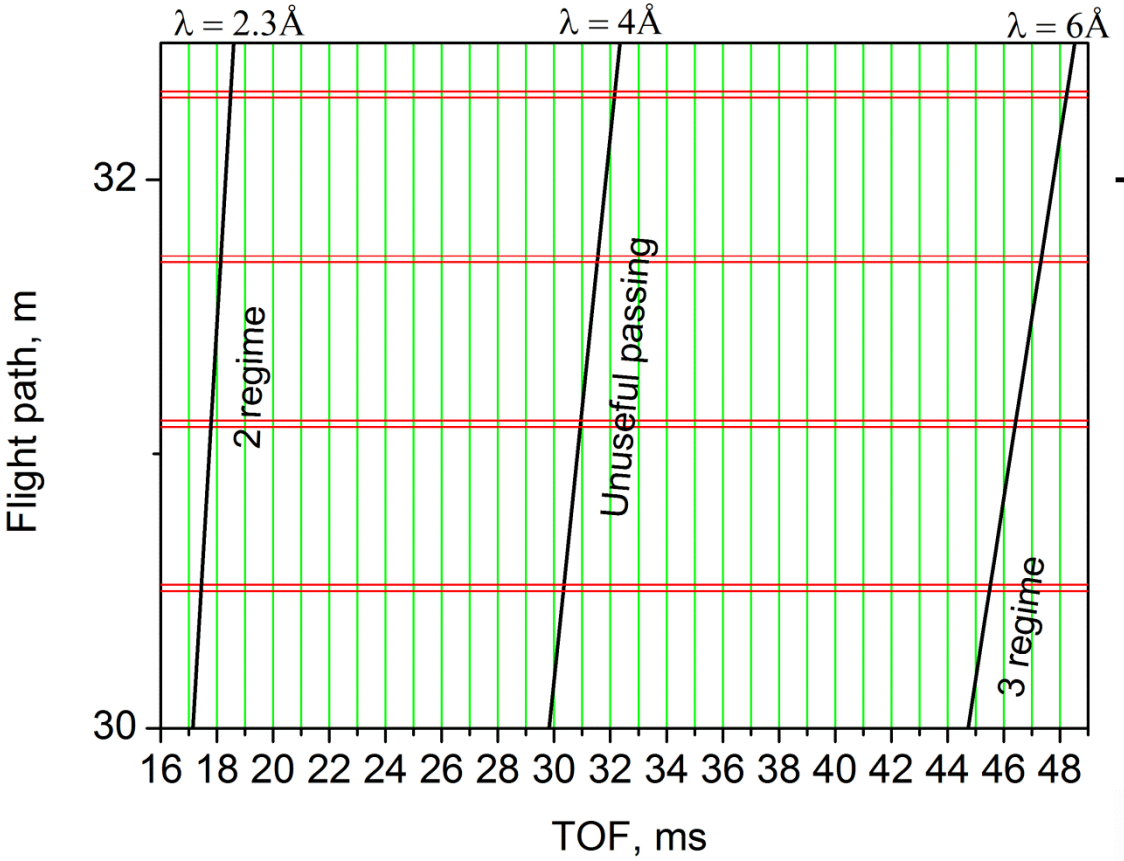

Time diagram

Polarization at the exit of SE setup

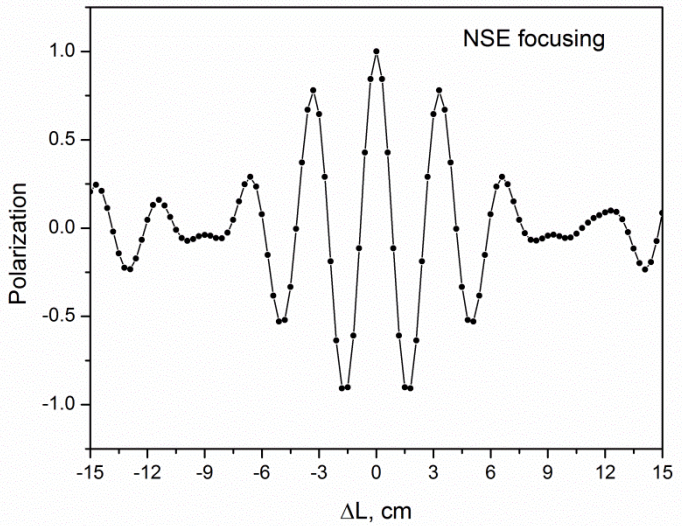

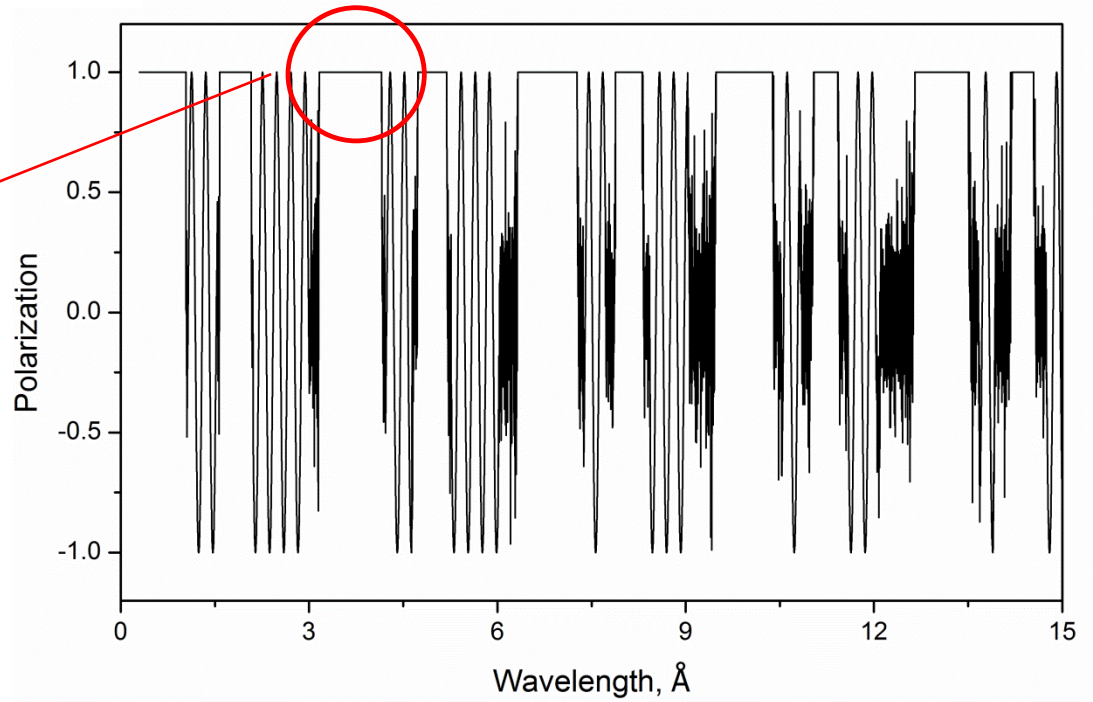

SESANS experiment simulation and analytical calculation (uniform sphere particles)

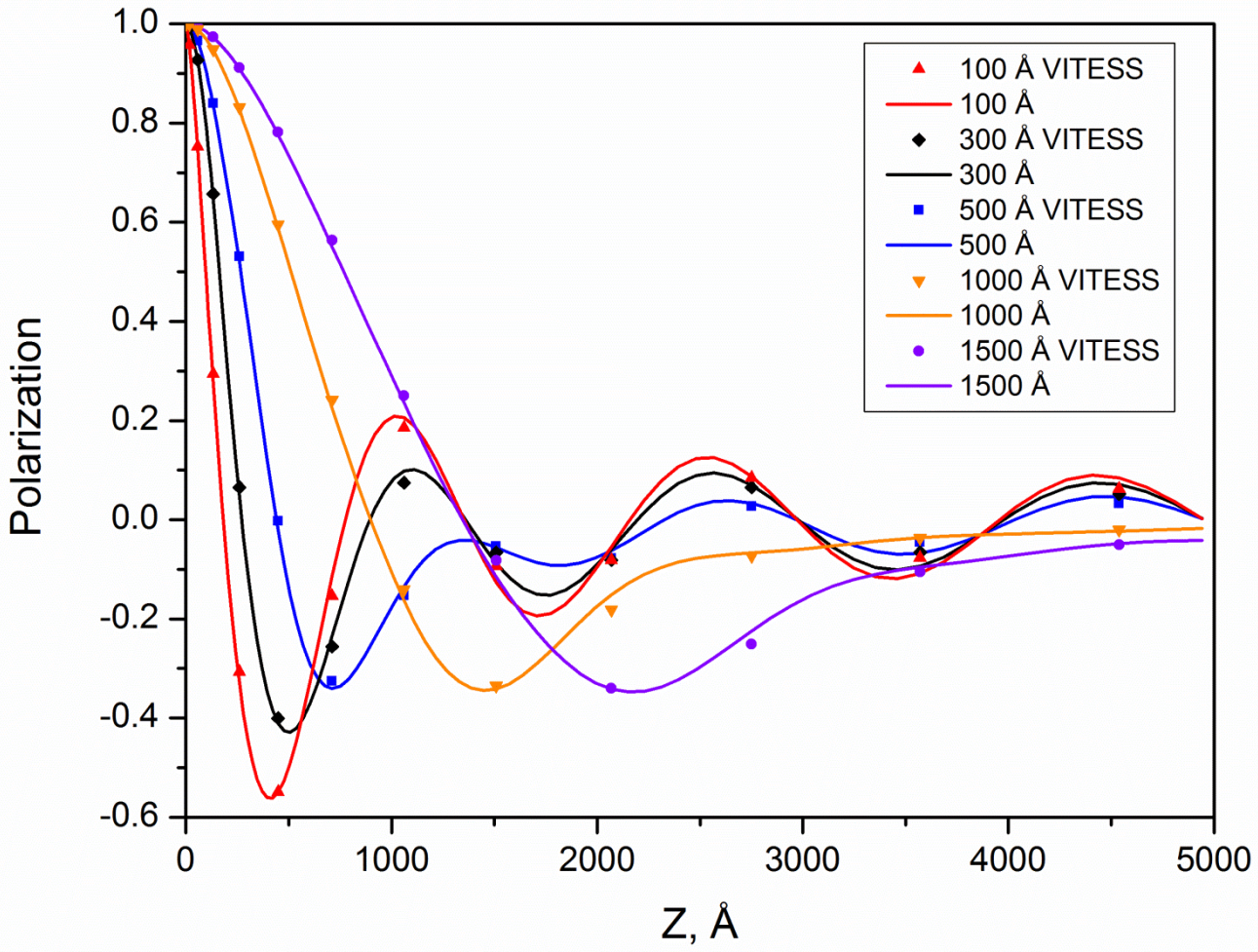

Geometrical factors

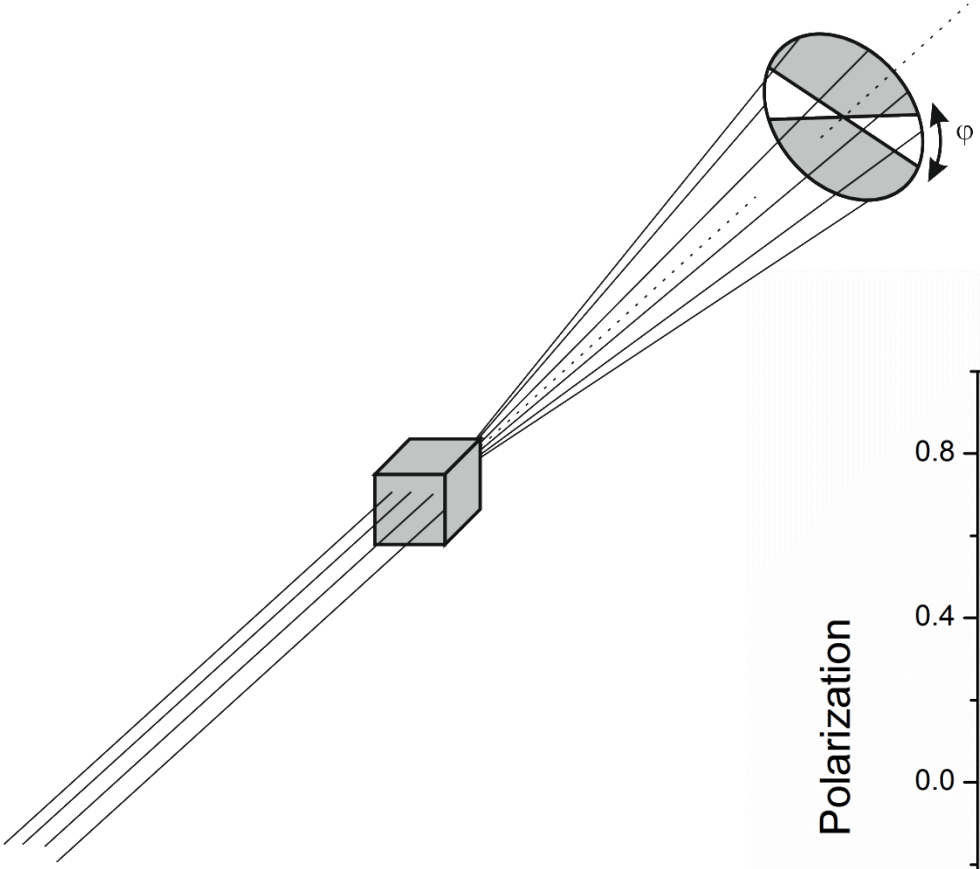

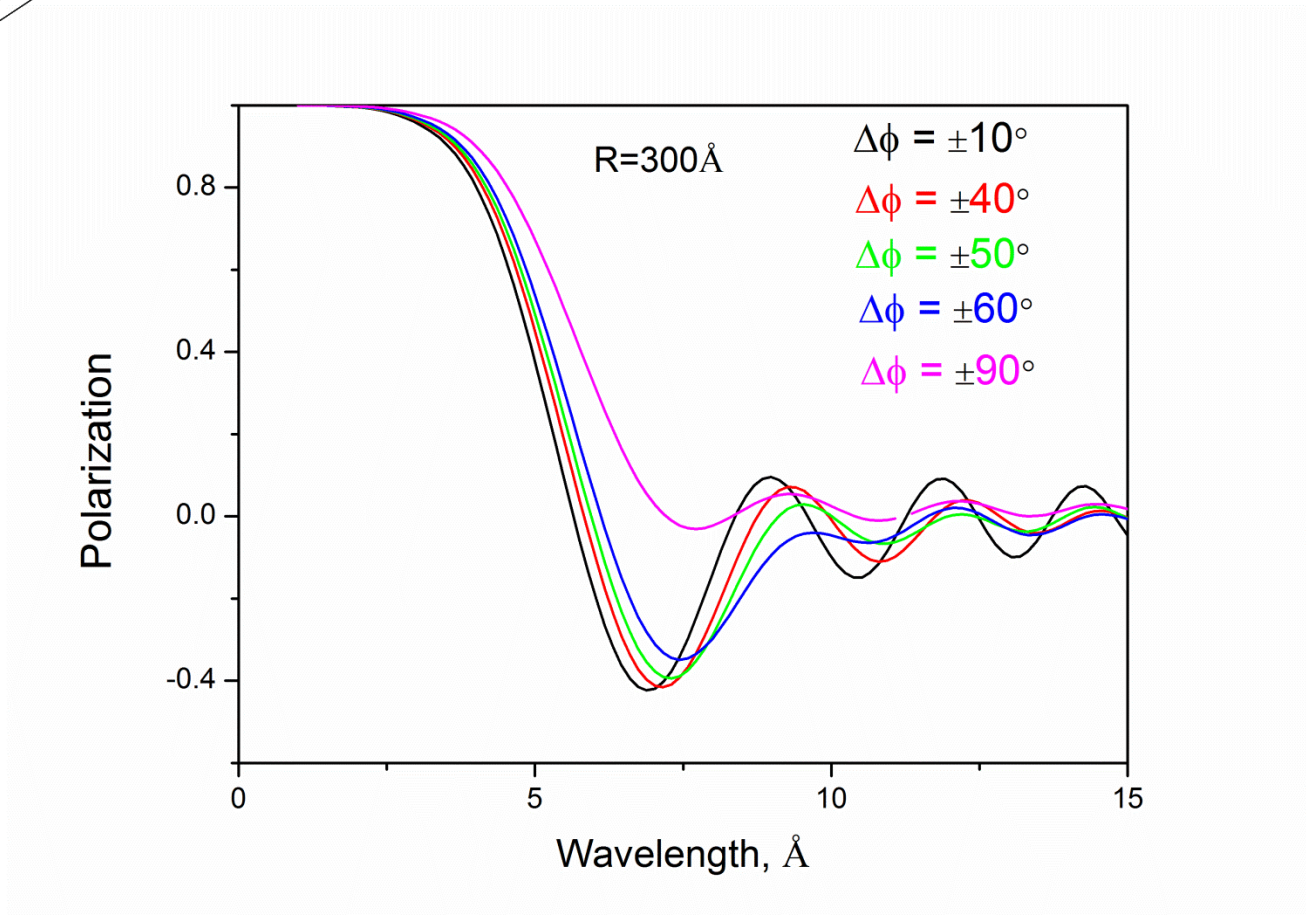

Magnetic system modeling and simulations

Fig. 1 Field amplitude distribution along beam axis:

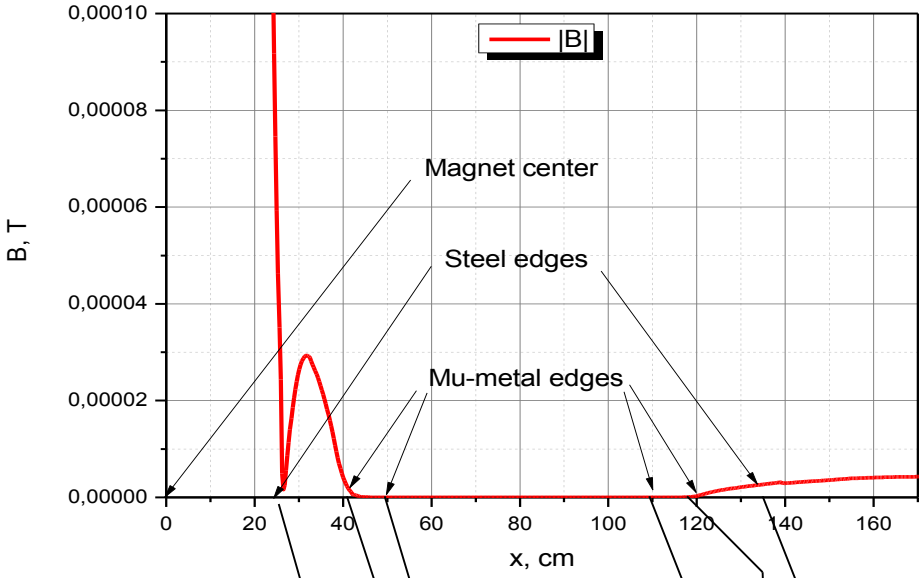

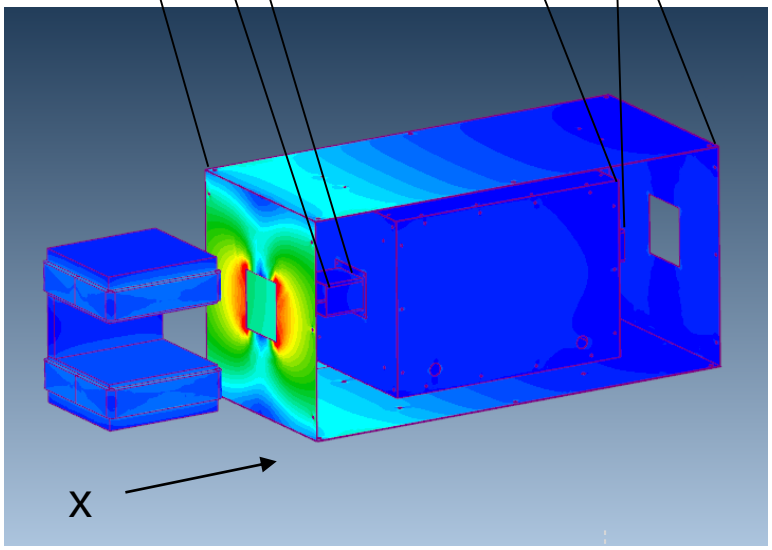

Fig. 2 Sample magnet and zero field chamber.

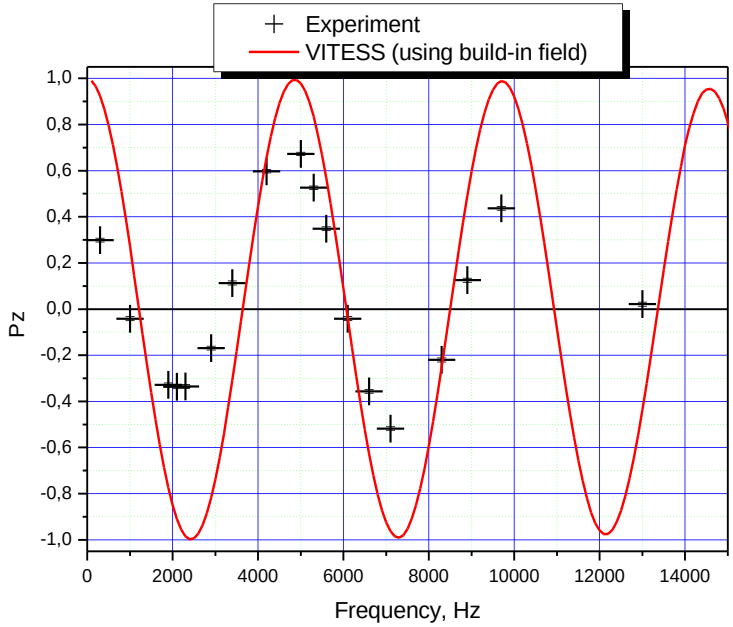

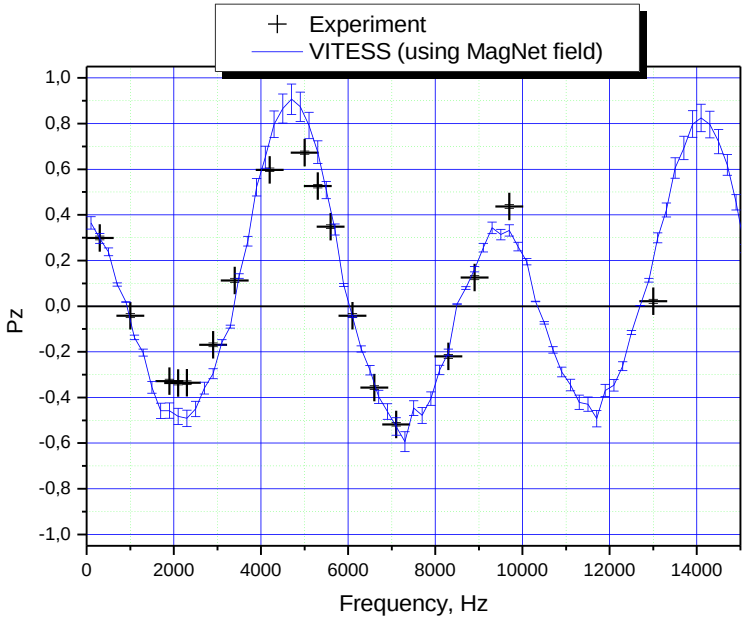

Set-up scheme

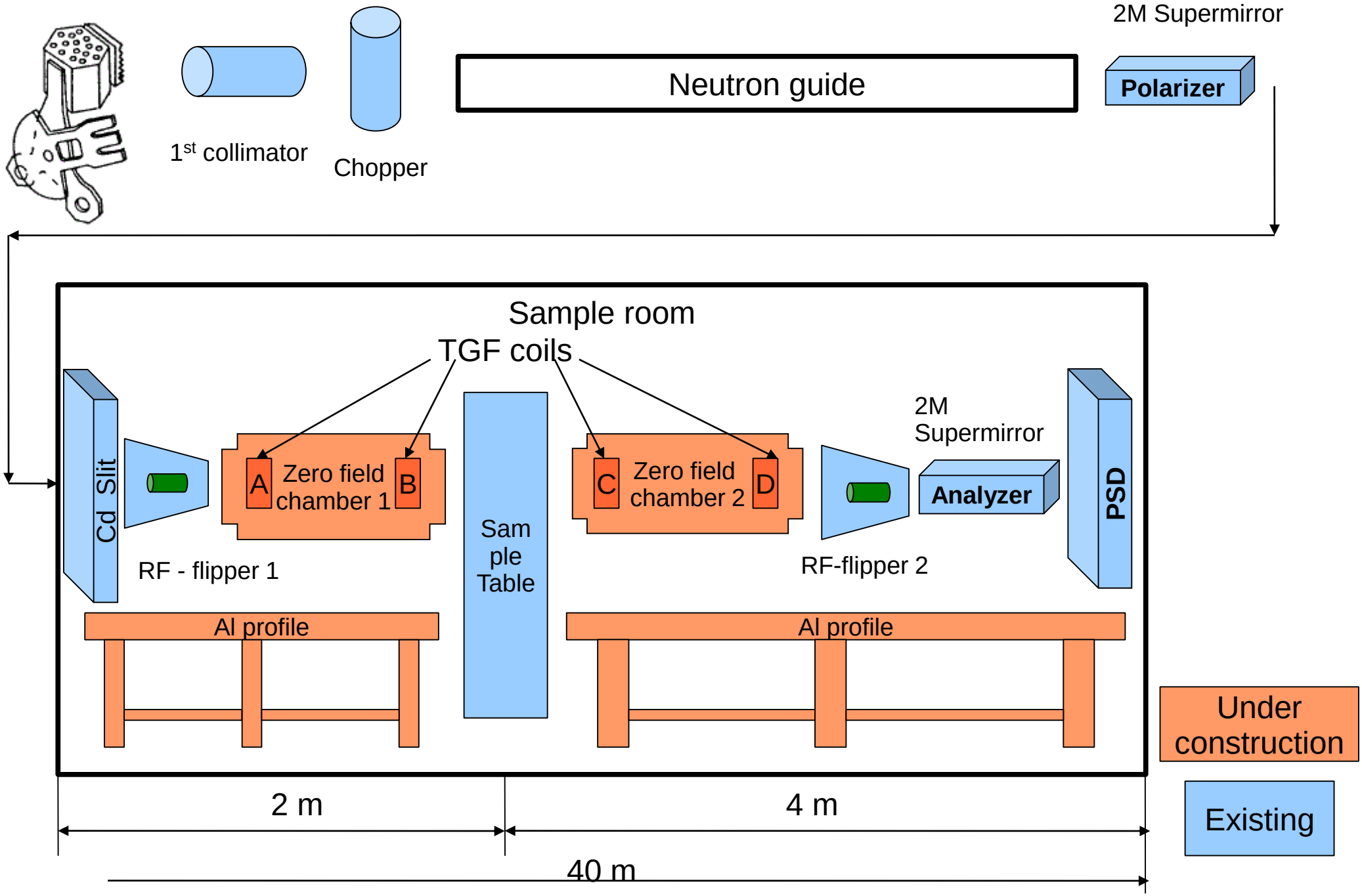

TGF coils

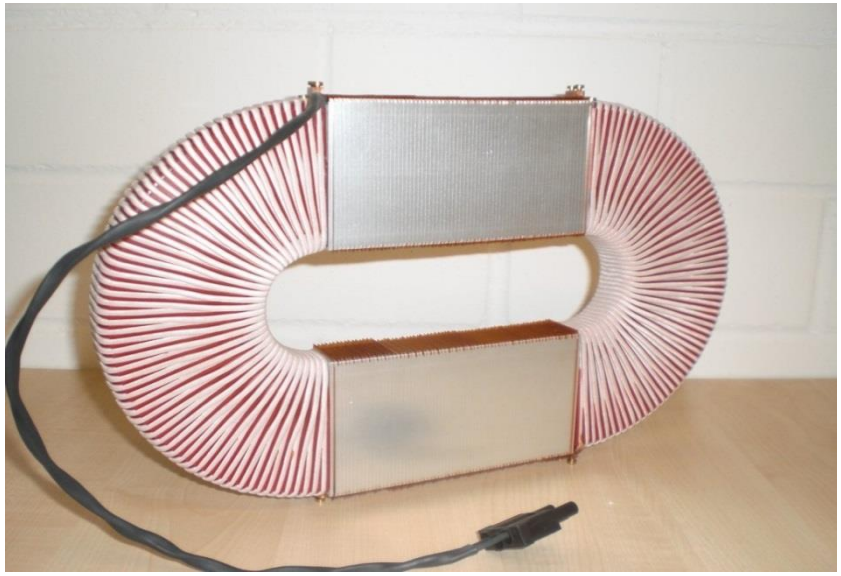

Current shape.

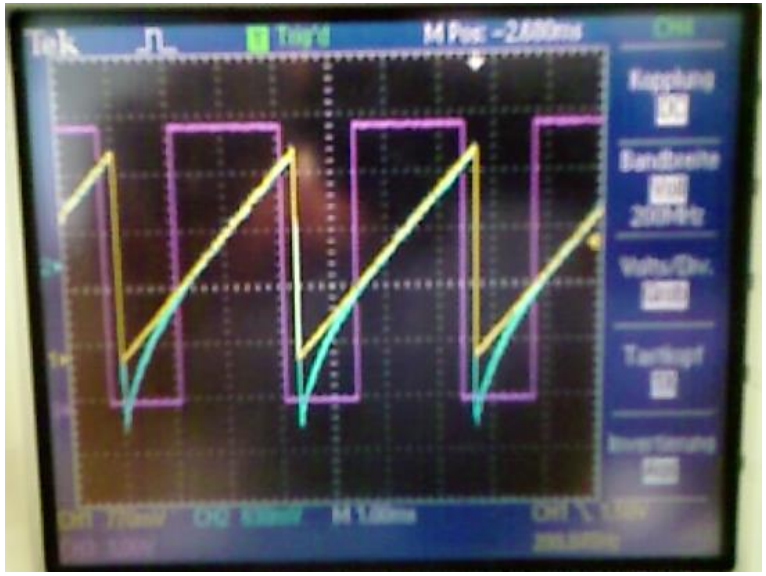

- control signal
- measured current
- available for measurement range

Electronics

Power supply:
Agilent 6692A
Current: 0 - 110 A
Voltage: 0 - 60 V

Electronic load:
Agilent N3306A
Current: 0 - 120 A
Voltage: 0 - 60 V

Signal generator

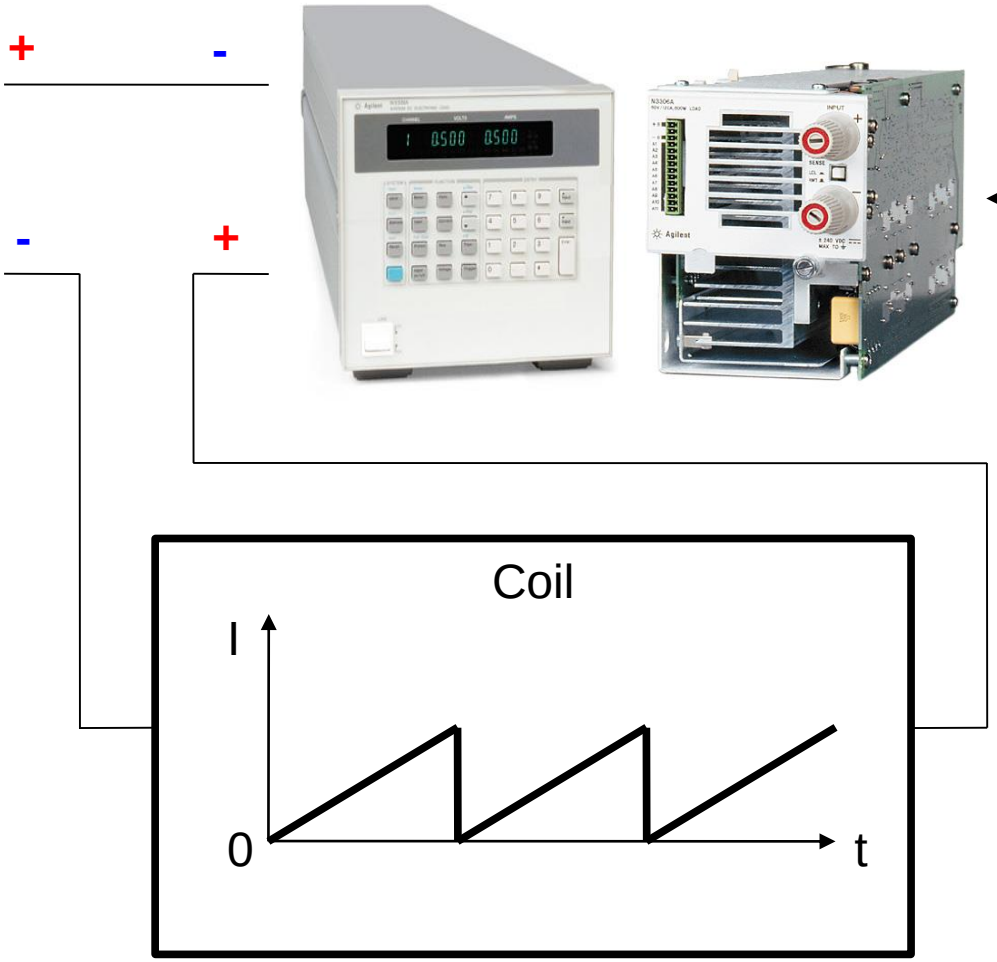

Material: μ-metal

Size:

400 x 400 x 600 mm^3

Beam size: 55 x 80 mm^2

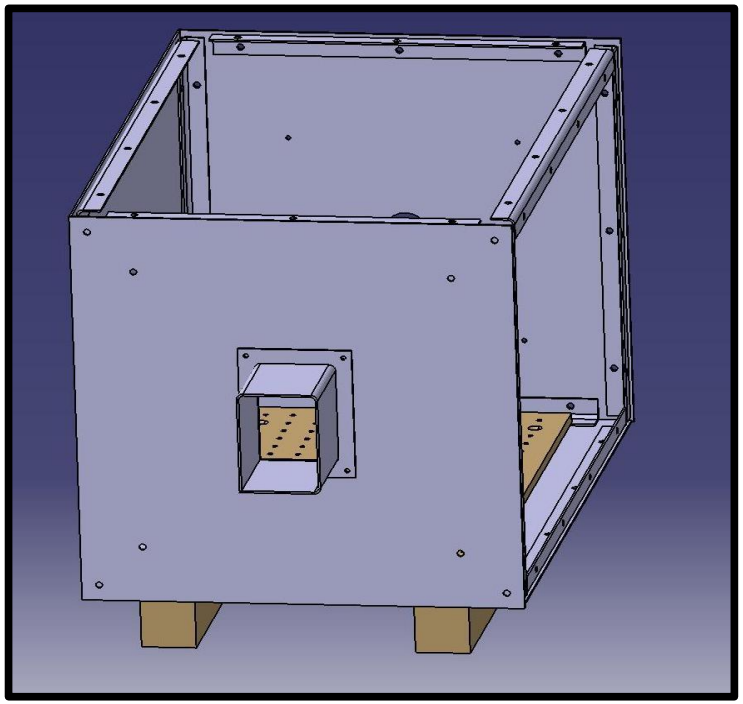

Material: steel

Size:

600x600x1000 mm^3

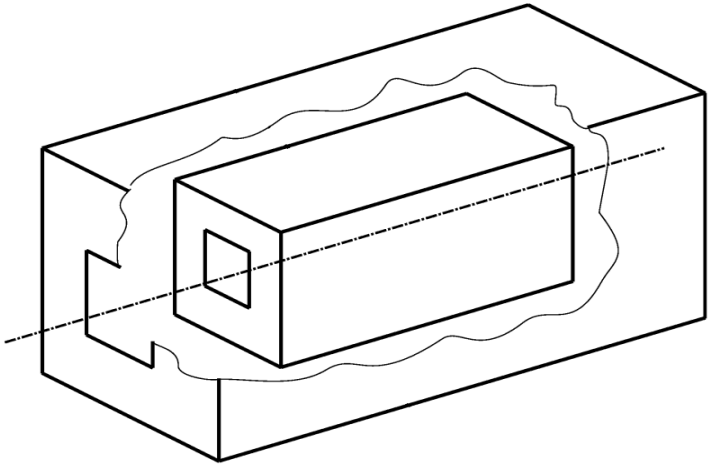

Outer box: steel

Size: 600 x 600 x 1000 mm³

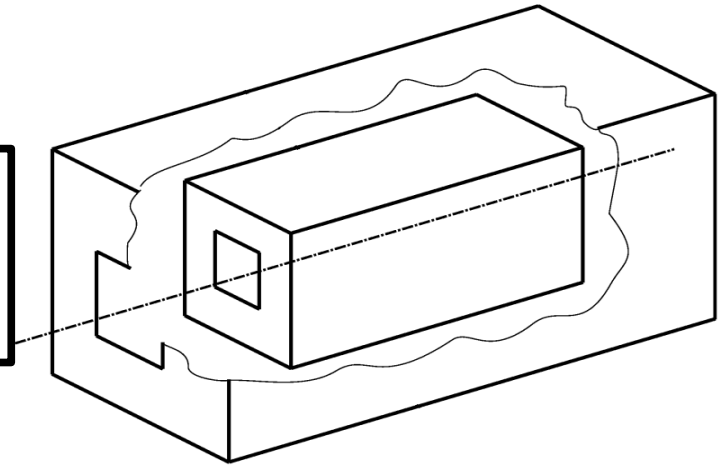

Coupling coil

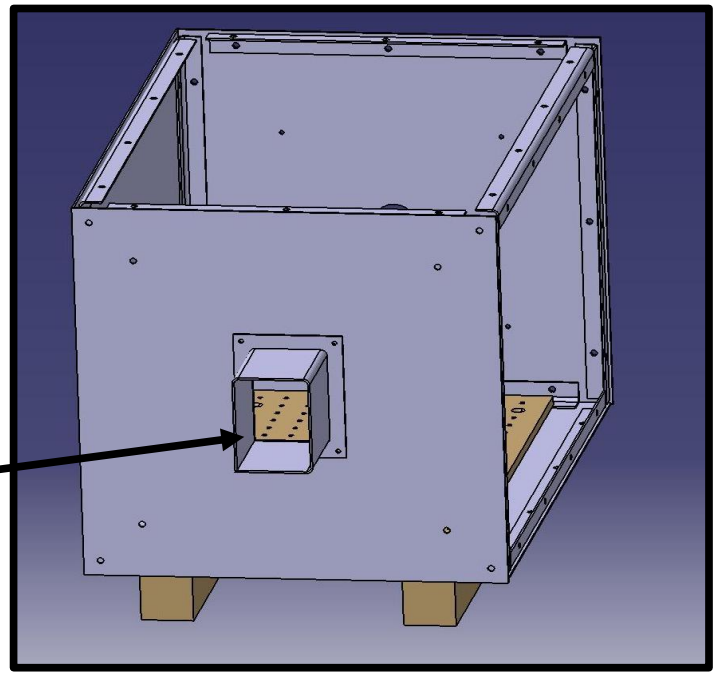

Inner box: μ-metal

Size: 400 x 400 x 600 mm³

Support

Thank you for your attention!